Origins Space Telescope (OST) Mission Concept Overview

Instrument Interface and Face-to-Face Meetings

Science and Technology Definition Team (STDT)

A. Flores, Mission Systems Engineer (MSE)

NASA Goddard Space Flight Center

8800 Greenbelt Road, Greenbelt, MD 20771

June 13, 14 & 15, 2017

GSFC Design Team Members

OST GSFC Design Team Members are as follows:

- Study Scientist: David “Dave” Leisawitz
- Deputy Study Scientist: Johannes Staguhn
- Study Manager (401): Ruth Carter
- System Architect/Technologist (542): Mike DiPirro
- Mission Systems Engineer (MSE) (599): Anel Flores
- Instrument System Engineer (ISE) (592): James “Jim” Kellogg and Ed Amatucci
- Optics (551): Joe Howard and James Corsetti
- Cyro (541): Ed Canavan
- Mechanical (543):, Greg Martin and Andrew Jones
- Thermal (545): Lou Fantano
- ACS (591): Eric Stoneking
- Flight Dynamics: Dave Folta and Casandra “Cassie” Webster
- Propulsion: Daniel “Dan” Rampspacker
- Electromechanical (544): Rajeev Sharma
- Structural Analysis and Modelling (542): Tim Carnahan
- Materials (541) : Carley Sandin, Kevin Hodges
- Detectors (553): Kevin Denis
- Electrical and Data Systems (564): Damon Bradley and Porfirio Beltran
- Integration and Test (568): Susanna Petro
- Mission Operations & Ground System (581): Steve Tompkins

OST Mission Goals

The Origins Space Telescope is the mission concept for the Far Infrared Surveyor, a study in development by NASA in preparation for the *2020 Astronomy and Astrophysics Decadal Survey*

OST is planned to be a large aperture (8-m to 15-m), actively-cooled telescope (~4K) covering a wide span of the mid- to far-infrared spectrum. Its spectrographs with enable three-dimensional surveys of the sky that will discover and characterize the most distant galaxies, exoplanets and the outer reaches of our Solar System. The observatory is planned to be placed in the Sun-Earth L2, similar to JWST.

Principal Science Themes include:

- Tracing the Signatures of Life and the Ingredients of Habitable Worlds
- Unveiling the Growth of Black Holes and Galaxies over Cosmic Time
- Charting the Rise of Metals, Dust, and the First Galaxies
- Characterizing Small Bodies in the Solar System
- Measuring exoplanet biosignatures to search for signs of life

ORIGINS Space Telescope

Top-Level Mission Requirements

- Observatory to Accommodate the following five (5) instruments:
  - Medium Resolution Survey Spectrometer (MRRS) – JPL
  - Hi Res (Far-IR) Spectrometer (HRS) - GSFC
  - Heterodyne Instrument (HI) – Europe
  - FIR Imager/ Polarimeter (FIP) – GSFC
  - MID-IR Imager Spectrometer/ Coronagraph (MISC) – JAXA
- **Instrument Wavelength Coverage:** 6 to 600 microns
- **Mission Duration:** 5 years nominal with up to 10 years extended
- Baseline Observatory to fit into a 5-m launch vehicle fairing, because this fairing size is rather common and is expected to be available for the foreseeable future.
- **Telescope size:** the largest telescope compatible with a launch in a 5 m fairing, with the understanding that it's aperture would be approximately 9 meters in diameter
- **Telescope type:** three mirror, unobstructed, off-axis field
- Observatory will be placed in appropriate orbit to be able to conduct the required science observations
- **Observatory operating temperature:** 4 to 4.5 K
- **Observing Strategies:** under development, TBD
- Appropriate launch vehicle to place the observatory in the proper orbit
- Observatory will transmit the science data to the Earth Mission and Science Operations Center's (MOC and SOC)
- **Serviceable observatory:** the instruments will be designed in serviceable modules with grapples and fixtures for servicing. A modular design could be helpful in I&T due to the accessibility of the instruments. We will assume the propellant fuel will also be serviceable. A servicing mission for OST itself; however, is not required to be designed at this stage.

ORIGINS Space Telescope

Top-Level Derived Requirements

- **Orbit:** Sun-Earth L2
- **Mission Classification:** Class A, generally fully redundant and cross strapped
- **Launch Vehicle (LV):** Vulcan Aces, Falcon Heavy or similar LV capability
- **LV Fairing Size:** 5-m Atlas V fairing or similar
- **Launch Date:** Mid-2030's
- **Optical Telescope Assembly (OTA) Temperature:** 4 K *Actively cooled using cryocoolers*
- Baseline non-articulating (i.e., fixed) telescope: articulation could be considered if it is required by the science requirements. However, an articulating telescope will require a gimbal mechanism, which has to be cold. Such a mechanism will add complexity, cost and risk.
- Instruments to be designed with appropriate internal redundancy and Level 1 components.
- Instrument electronics will be separate, located in the spacecraft bus (warm side), from the cold portion of the instruments located in the Instrument Accommodation Module (IAM) behind the OTA on the cold side of the observatory
- OST will provide ~4K for the instruments and an intermediate ~20 K zone for readout electronics using a total of eight cyro-coolers.
- The instruments will have to share a total 100 milli-watts on the telescope cold-side not necessarily equally.
- Total observatory power required is TBD watts at BOL.
- **Consumables:** such as propellant fuel, will be sized for 10 years
- OST will attempt to achieve attitude control requirements similar to JWST (or a combination with WFIRST) if possible, although, these requirements will be revised when all of the instruments requirements are known.

OST Instrument Optical Inputs Summary

1	Name	Medium Resolution Survey Spectrometer (MRS)	HI-Res Spectrometer (HRS)	Heterodyn Instrument (HI)	FIR Imager / Polarimeter (FIP)	MID-IR Imager Spectrometer w/Coronagraph (MISC)	MID-IR Imager Spectrometer w/o Coronagraph (MISC)
a	Study Lead	JPL	GSFC	Europe (France, CNES)	GSFC	JAXA	JAXA
b	Science Lead	Lee Armus Alex Pope	Edwin Bergin	Maryvonne Gerin Gary Melnick	Joaquin Vieira Margaret Meixner Kate Su	Kimberly Ennico Smith	Kimberly Ennico Smith
c	Instrument Lead	Matt Bradford	S. Harvey Moseley	Martina Wiedner	Johannes Staghun	Tom Roellig/Itsuki Sakon	Tom Roellig/Itsuki Sakon
2	Optical Design Form	Offner relay	Synthetic Grating	relay	wide field relay	various	various
3	Bandpass (µm)	30 - 800	25 - 160	63 to 610	35 - 500	7 to 38	7 to 38
4	Design Wavelength (µm)	30	35	63	40	20	20
5	Spectral Resolution	Grating, R = 500: FTS, R=3000	100,000 at 50 µm	1.00E+07	-	various	various
6	Telescope Aperture (m)	>6	8	>10	9	9	9
7	Telescope Shape	circular preferred	circular	circular preferred	circular	circular (Coronagraph strongly prefers a circular aperture without obstruction by a secondary mirror nor support structures).	circular preferred
8	sensitivity or PSF shape?	sensitivity	-	both	-	shape	shape
9	Telescope F/#	any	any	-	4	-	-
10	On vs Off-axis pupil ?	Off-axis (mild preference)	Neutral	Require small blockage; beware of standing waves	Off-axis pupil preferred; not required	Off-axis pupil preferrred, important for exoplanet observing	Off-axis pupil preferred; not required
11	Full FOV	6 to 8 slits, 1x100 diff limited pixel samples	7 beams (spatial)	1 x 1 arcmin	30 x 30 arcmin	3 x 3 arcmin plus slits	3 x 3 arcmin plus slits
12	Pixel Sampling	lambda/D requested	lambda / D at 50 µm	2 beams	0.9 lam/D	FWHM span 4 pixels in Coronagraph, 2 pixels in imager	FWHM span 2 pixels in imager
13	Detector?	100 x 300 array of 100 micron pixels	10^5 pixels, 0.5 to 1mm pitch, arbitrary format	feed horns	large array of 0.5 mm pixels	1k x 1k array of 18 or 30 micron pix	1k x 1k array of 18 or 30 micron pix
14	Scanning?	2-3 arcmin scanning at instrument level; drift scanning of telescope over 10 deg	not a design driver	Drift scanning of telescope over degrees	1 square degree	N/A	N/A
15	Image quality	Diffraction limited at design wavelength	Diffraction limited at design wavelength	Diffraction limited at design wavelength	Diffraction limited at design wavelength	diff limited at 20 microns	diff limited at 20 microns
16	Sensitivity	stray light < 4% emissivity of telescope	1/2 in-band background of R = 100,000	-	NEP 10e-19 W/sqrt(Hz)	Yes	Yes
17	Stability	modulate at 0.1 to 10 Hz	-	1/10 of one "beam" for pointing		3mas pointing, aided by internal tip/tilt mirror	3mas pointing, aided by internal tip/tilt mirror
18	Mechanisms?	FTS stage	-	chopping mirror	Scan mirror desired	DM for coronagraphy and MIR Imager and Spectrometer, plus tip-tilt mirror	DM for MIR Imager and Spectrometer, Tip-tilt mirror
19	Interfaces?	optical	2.5 meter grating	-	-	-	-
20	Special Considerations?	-	-	Local Oscillator	-	-	-

Yellow cells highlight telescope design drivers

Notional Unobstructed, Off-Axis Field, Observatory

9.1-m Aperture Diameter Primary Mirror (~4 k),
Three mirror, unobstructed, off-axis field

Actively cooled (~4K)
Baffle Assembly
(not shown on right,
see inset below for
concept)

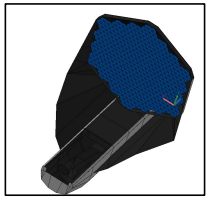

Deployed Observatory
Configuration

Fixed (Deployable, Non-
articulating) Optical
Telescope Element (OTE)

Sunshield
Five (5) Layers*
0.75-m Spacing

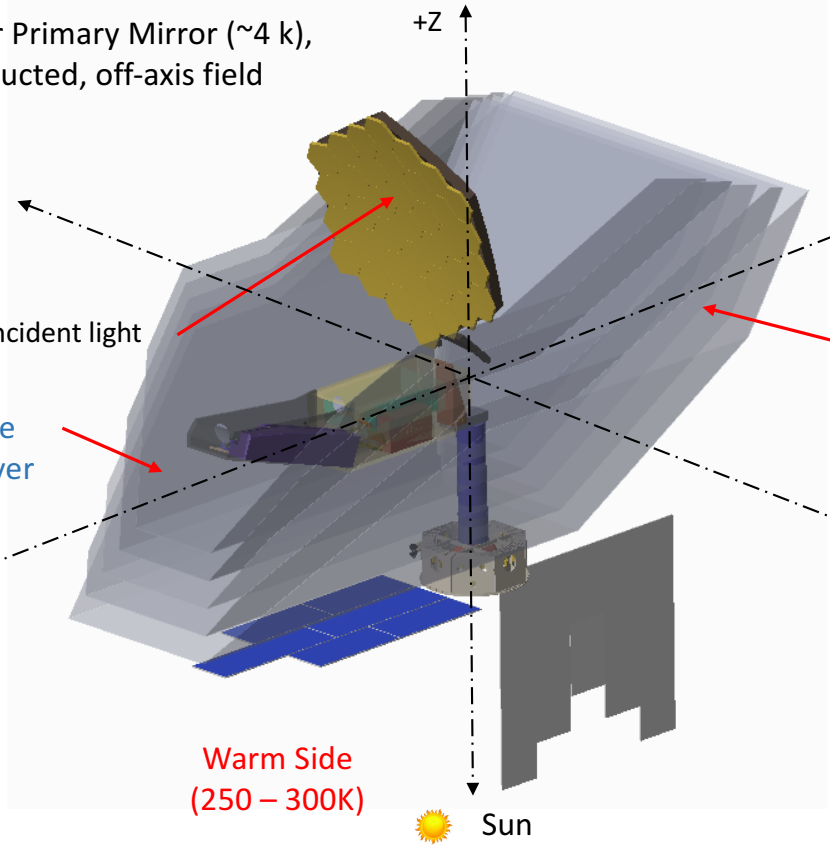

Field of Regard
+5˚ to -45˚ Pitch off Sun line
±180˚ Yaw about Sun line
±5˚ Roll about Line of Sight (LOS)

*Assumes parallel spacing between layers. Angular spacing between the Sunshield layers is also being explored

Unobstructed Observatory Aft View

<u>Field of Regard</u>
-5˚ to -45˚ Pitch off Sun line
±180˚ Yaw about Sun line
±5˚ Roll about Line of Sight (LOS)

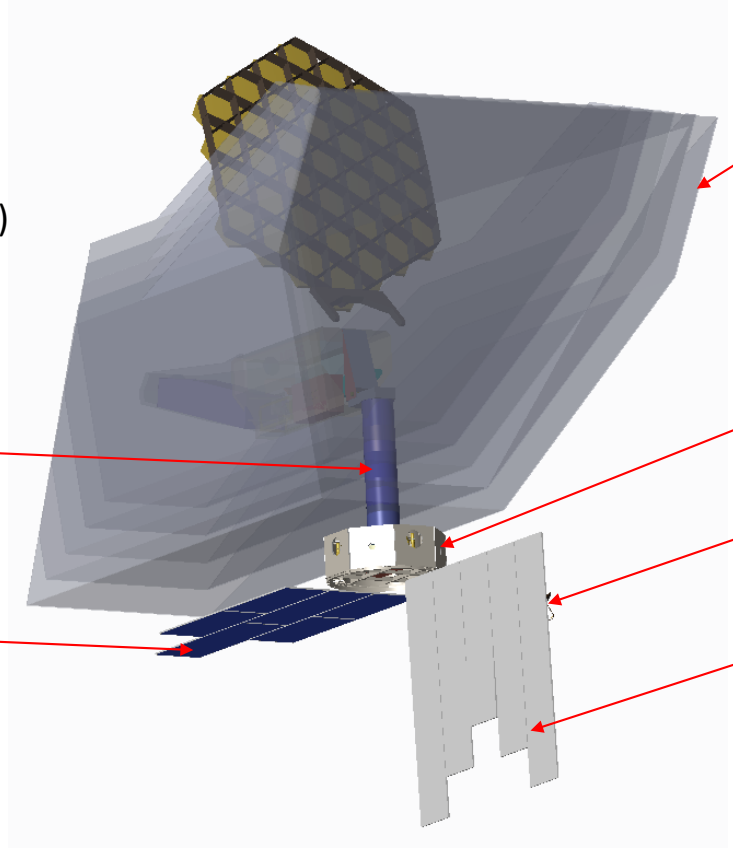

Unobstructed Observatory Side Views Showing Light Trace

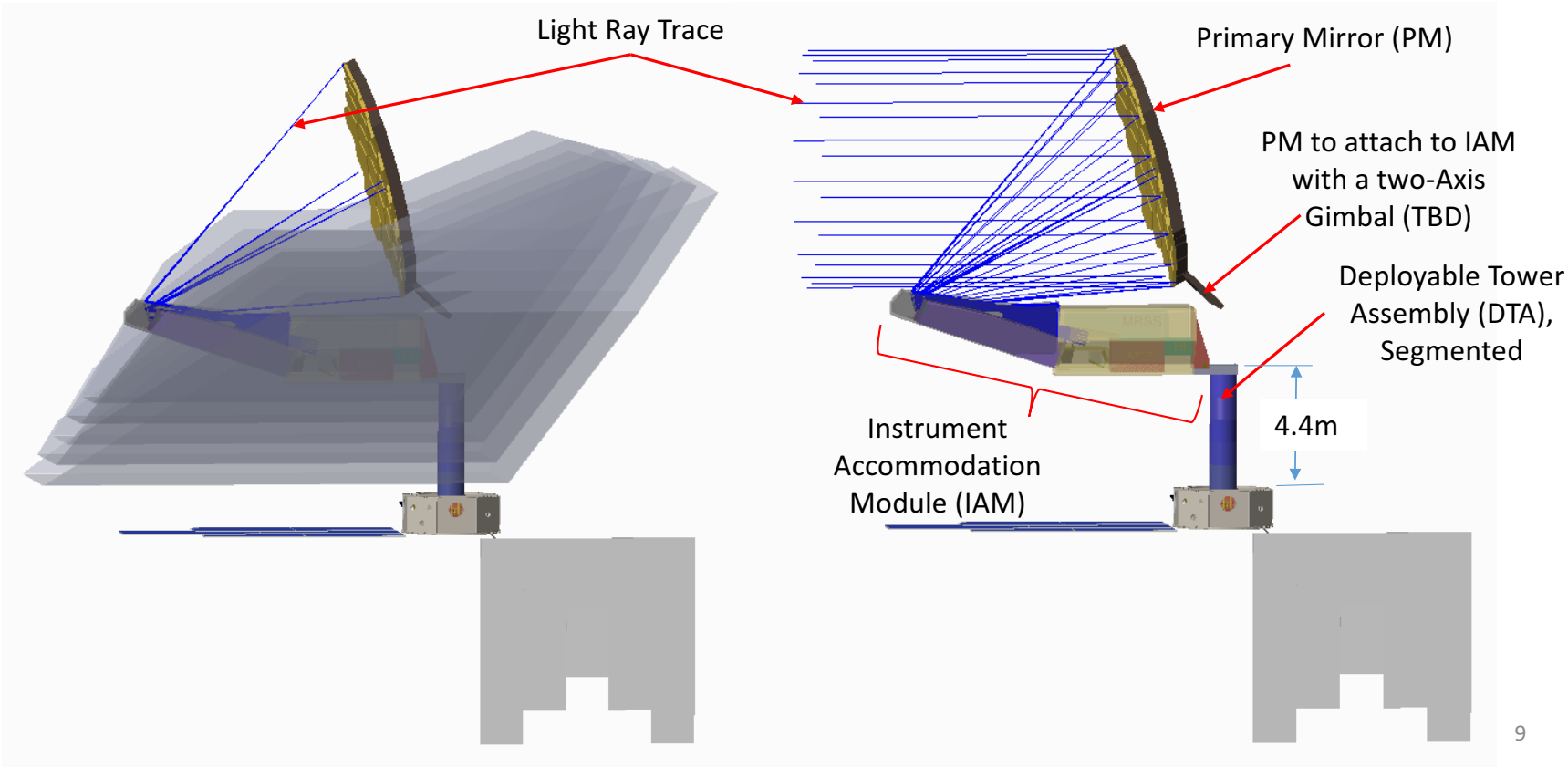

Unobstructed Observatory Top-View

Dimensions in Meters

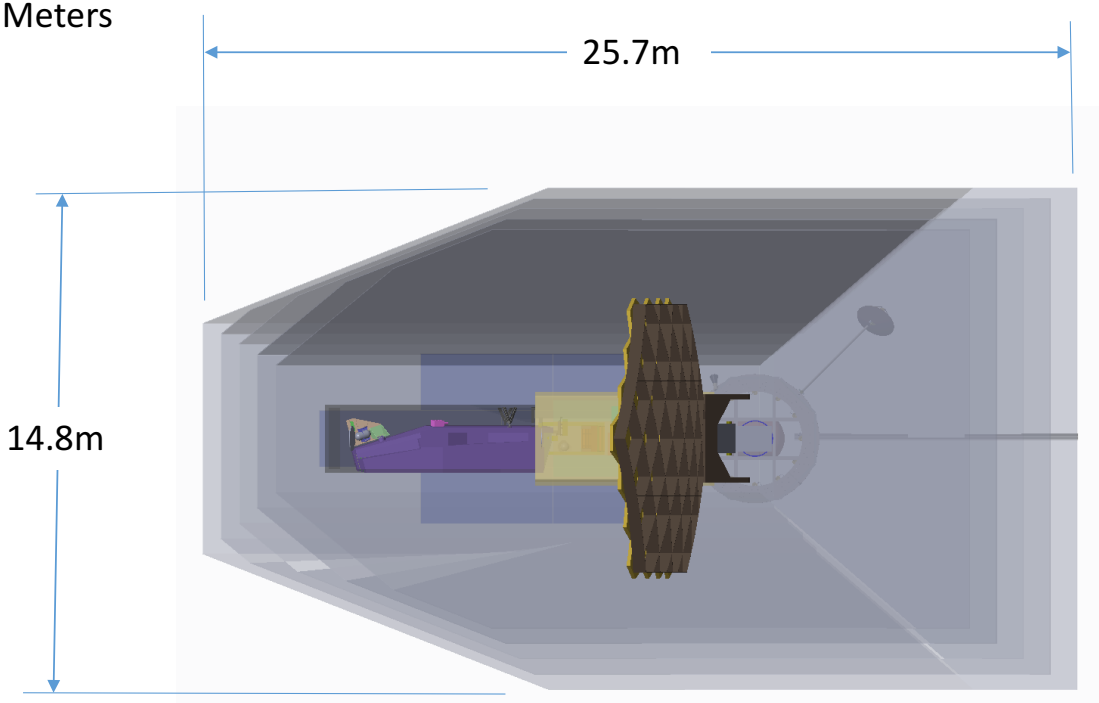

Instrument Accommodation Module (IAM)

Cut-Away View showing Instruments

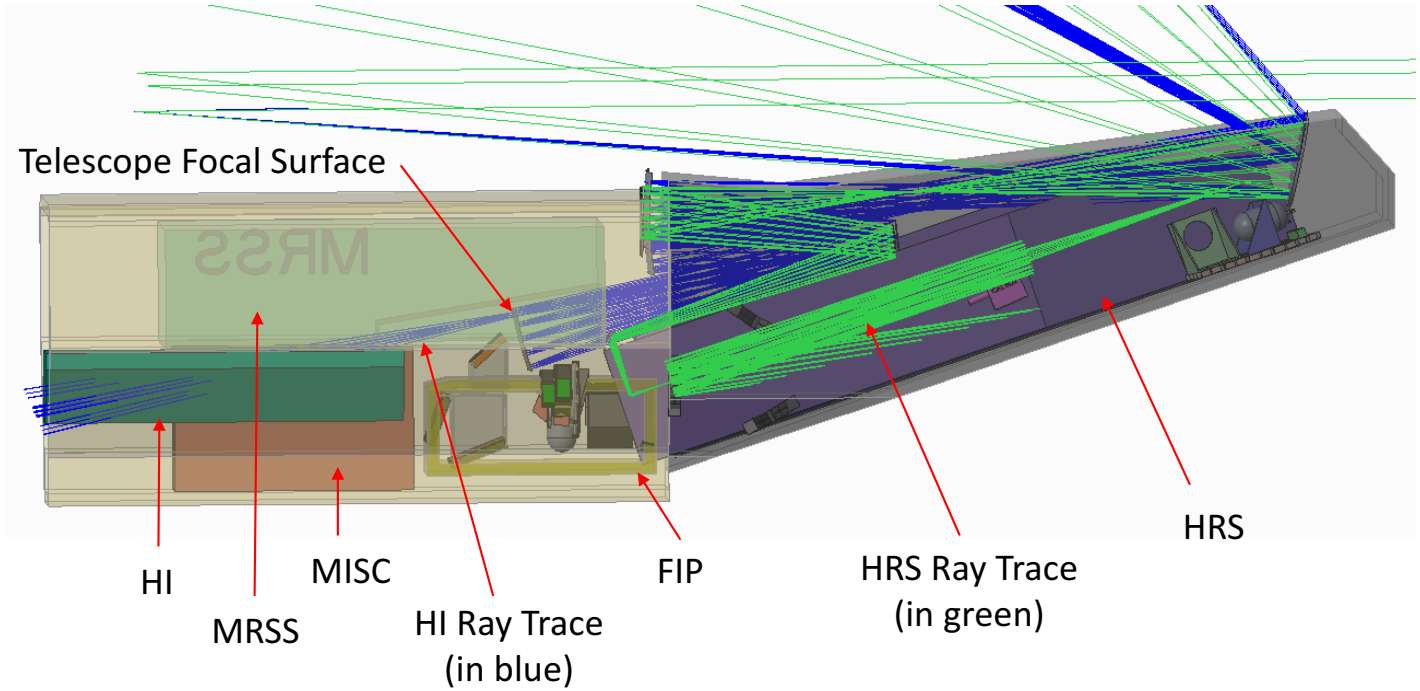

HI & HRS Instrument Ray Traces in the IAM and IAM Top-view

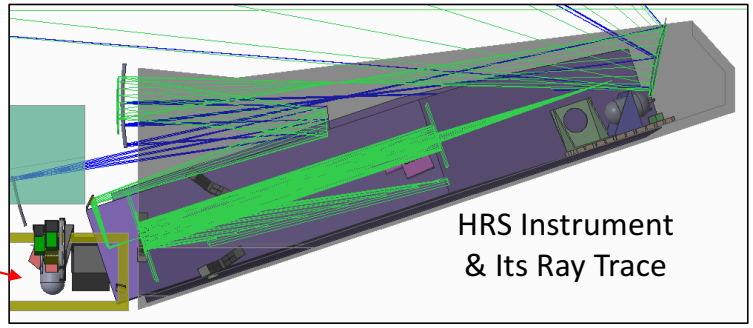

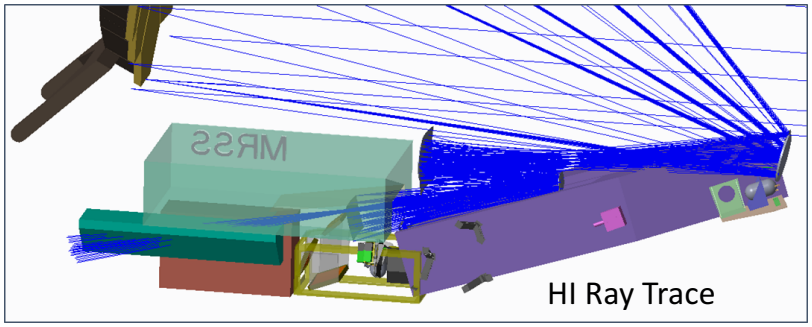

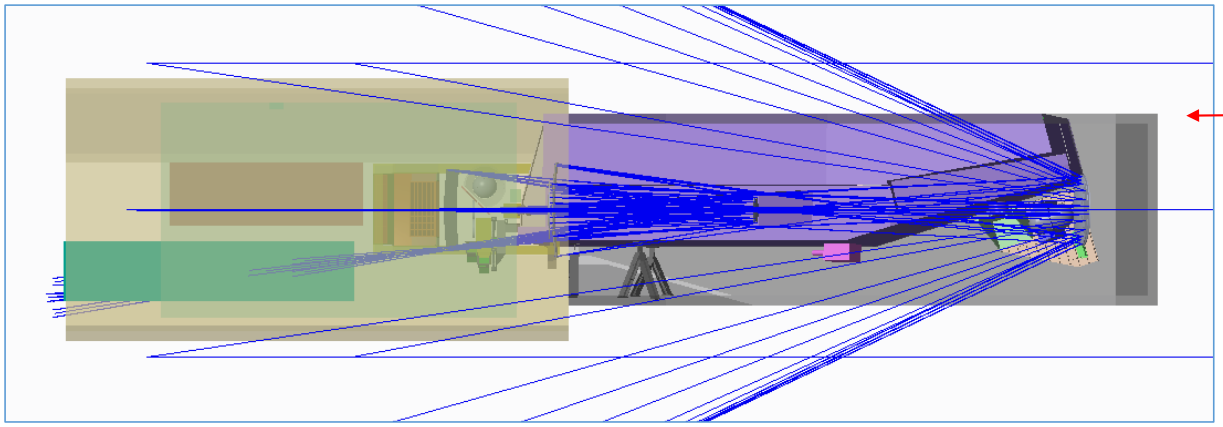

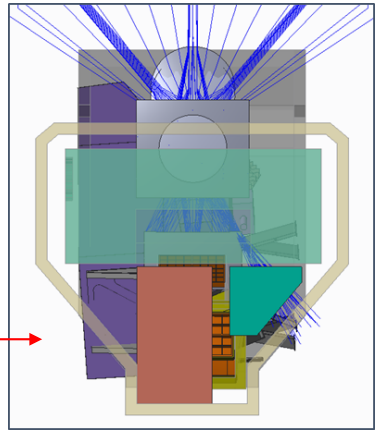

ORIGINS Space Telescope

Observatory ROM Mass Estimate

Item	Mass Estimate (kg)	Comments
Instruments (Total of 5)	2,370	Initial allocation total of ~825 or ~165 kgs per instument
FIR Imager/Polarimeter (FIP)	508	Initial IDL mass estimate with OST Team Modifications
Hetrodyne Instrument (HI)	383	Martina's Rough Estimate
High Resolution Spectrometer (HRS)	936	Initial IDL's mass estimate
Medium Resolution Survey Spectrometer (MRSS)	435	Initial Rough Estimate provided by JPL
MID-IR Imager Spectrometer Coronograpgh (MISC)	108	Initial estimate from Itsuki Sakon, March 2017 F2F meeting
Optical Telescope Element (OTE)	2,594	Assumes 40 kgs/m^2, unknown if possible, dependant on material selected and needed OTE structural frequency. The JWST figure is ~68 kgs/m^2 all inclusive (see OTE Tab).
Cryocoolers (8 @ 66 kgs each)	528	Mike Dipirro's Mass Estimate
20 K Box		TBD, ~10's of kilograms, relatively small
Sunshield	1,000	Rajeev Sharma's mass estimate (Drew Jones' initial rough estimate was 1,861 kgs)
Baffle Assembly	350	Rajeev Sharma's mass estimate (Drew Jones's initial rough estimate was 223 kgs)
IAM (Less Instruments)	321	Greg Martin's Rough Estimate
SC Bus	2,284	Anel & Greg Martin's Rough Estimate
Deployable Tower Assemby (DTA)	149	Greg Martins Rough Estimate
Curent Best Estimate (CBE) Dry Mass	9,596	
Propellant/ Pressurant	1,360	Based on a projected ~200 m/s Delta V, Folta and Webster; or ~960 kgs; plus ~400 kgs for momentum unloading, Eric Stoneking. Assumes MPV mass of 11, 095 kgs.
Curent Best Estimate (CBE) Wet Mass	10,956	Ideally ~9,015 kgs or below
CBE Wet Mass Overweight	1,941	
Contingency (%)	23.1%	Estimated *effective* contingency needed based on CBE Dry mass only
Contingency (kgs)	2215	Estimated *effective* contingency needed based on CBE Dry mass only
Maxium Expected Value (MEV) Dry Mass	11,810	
Maxium Expected Value (MEV) Wet Mass	13,170	Needs to be below ~11,095 kgs
MEV Wet Mass overweight	2,075	

Instrument and Flight System masses are preliminary and relatively immature

OST Instrument and Accommodation Requirements

OST Instrument Specification and Accomodation Requirements													
Instrument	Quanity	CBE Mass (kgs)	Total Mass (Kgs)	CBE Power (W)			Operating Duty Cycle(%)	Data Rate		Data Interface	Dimension (m) L x W X H	Volume (m^3)	Temperature
				Average	Peak	Standby		Average	Peak				Operating
Med-Resolution Survey Spectrometer (MRS)	1	435	435	2200				0.5 Gbit/sec					
Cold Side											2.5 x 2 x 2	~10	
Grating & Array Packages													
Interferometers													
Warm Side													
TBD													
Heterodyne Instrument (HI)	1	383	383	704								~1	
Cold Side	1	165											
Focal Plane Unit	1	128											
Local Oscillator Unit	1	25											
IF Unit	1	12											
Warm Side	1	218		704									
FPU Control Unit	1	50		74									
LO Unit Warm (multipliers, amplifiers)	1	55		128									
LO Control Unit (bias electronics)	1	25		10									
LO Source Unit	1	40		60									
FFTS	1	28		384									
Instrument Control Unit	1	20		48									
Far-IR Polarimeter/ Imager (FIP)	1		507.62	1804.1				50 Mbps	10 Gbps			~2	
Cold Side Instrument	1		326.6								2 x 1 x 1		4K
Detectors/Pre-amps at 4K	1			0.03									<0.1 K
HEMT Amplifiers (20K)	1			0.09									20K
Warm Side Electronics/Components			137.69	1804									
MEB	2												~300 K
FPE	2												
RF Box	1												
ADRC	1 TBC												
Harnesses	1		43.33										
Mid-infrared Imager, Spectrometer, Corornagrapgh (MISC)	1	107.9	107.9	242							2 x 1.6 x (0.1 - 0.4)	~0.85	
Cold Side			71.9										
Mid-Intrared Imager and Spectrometer Channel	1	40.6	40.6										
Mid-Infrared PIAACMC Coronograpgh Channel	1	24.3	24.3										
Mid-Infrared Transit Spectrometer Channel	1	7	7										
Warm Side Electronics			36	242									
Mid-Intrared Imager and Spectrometer Channel	1	22	22	127									
Mid-Infrared PIAACMC Coronograpgh Channel	1	10	10	109									
Mid-Infrared Transit Spectrometer Channel	1	4	4	6									
High Res Spectrometer (HRS)	1	936.5	936.5	599.1				12 Mbps	480 Mbps		~1 x ~1.5 x ~5	~6	
Cold Side													<4 K
Detectors/Pre-amps at 2K				0.021									<0.1 K
HEMT Amplifiers (20K)				0.06									20K
Warm Side				599									~300 K
MEB													
FPE													
RF Box													
ADRC													
Total			2370.0		0	0						~22 - 25	

ORIGINS Space Telescope

Instrument Attitude Control System Questionnaire Responses

Instrument	Mid-IR Imager Spectrometer Coronagraph	Heterodyne Instrument	Heterodyne Instrument	Heterodyne Instrument	Heterodyne Instrument	Far-IR Polarimeter	High-Res Spectrometer	Med-Res Survey Spectrometer	Med-Res Survey Spectrometer	Med-Res Survey Spectrometer
Acronym	MISC	HI	HI	HI	HI	FIP	HRS	MRSS	MRSS	MRSS
Mode		(Stare)	(Raster)	(Scan)	(SSO Track)			(Inertial Point)	(1-deg Survey)	(Large Survey)
Wavelength Range	6-38 um	63-66,111-610 um				35-250 um	20-300 um (maybe 20-500 um)	30-600 um		
FOV	3x3 arcmin	1.2x1.2 arcmin	1.2x1.2 arcmin	1.2x1.2 arcmin	1.2x1.2 arcmin	10x20 arcmin		Two long slits, max dim 0.25 deg		
Pixel Size	50 mas							~1.2 f lambda		
Absolute Pointing Accuracy	44 mas	1.4 arcsec	1.4 arcsec	1.4 arcsec	0.2 arcsec (comets)	No requirement		60 mas	0.1 arcsec	0.1 arcsec
Definitive Pointing Knowledge (after ground processing)										
Onboard Pointing Knowledge		1.2 arcsec	1.2+ arcsec	1.2+arcsec	1.2+arcsec	0.1 arcsec (1/10 beam?)		30 mas		
Pointing Stability (Drift)	22 mas per exposure	0.1 arcsec	0.5 arcsec	0.5 arcsec	0.5 arcsec	0.1 arcsec (10/10 beam?)				
Jitter	22 mas RMS					1/10 beam		60 mas peak-to-peak over 1 hour		
Driving Slew Reqt										As fast as possible
Scanning Rate	1 arcsec/sec			0.1-60 arcsec/sec	10-30 arcsec/sec	60 mas/sec		0	60 arcsec/sec	Up to 100 arcsec/sec
Scanning Accuracy										60 mas
Regions to Observe?	Anywhere	Mainly Milky Way and nearby galaxies			Solar System Objects			Point Sources	1-deg square	Wide-Field Surveys
Ops Profile		Stare with 3-arcmin slews	Raster. Step size 1/2 beam. 3-arcmin nod at each grid point.	Scan	Track	Lissajous or scan with mirror		Point and Chop	Raster Scan (or Lissajous?) with mirror?	Raster Scan (or Lissajous?) with S/C (+ mirror?)
Longest Uninterrupted Dwell?		100s to 20 min (TBC)						A few hours	N/A	N/A
Parallel Ops?						Probably incompatible with HI		Possible, but not with HI		
Disturbance Sensitivities?		Vibrations, temperature	Vibrations, temperature	Vibrations, temperature	Vibrations, temperature			Yes, not quantified		
Disturbance Sources?	No	Yes, but not in Standby						Maybe, but not large		

Attitude Control System

- Driving Requirements
  - Absolute Pointing: 44 mas (MISC)
  - Onboard Pointing Knowledge: 30 mas (MRSS Inertial Point)
  - Jitter: 22 mas RMS (MISC)
  - Scanning Rate: 100 arcsec/sec (MRSS Large Survey)
- Assumptions
  - Moments of Inertia: [120,000 170,000 100,000] kg-m^2
    - 2x JWST (till we know better)
  - Momentum Accumulation 450 Nms/day
    - At 45-deg pitch
    - “Compact” sunshield
    - Total specular reflection
    - Mass center assumed [3.0 0.0 4.0] from sunshield major fold center
    - Looking into techniques for reducing accumulation rate
      - Tailor sunshield reflectivity?
      - Trim tab?

Solar Radiation Torque Vs. Pitch

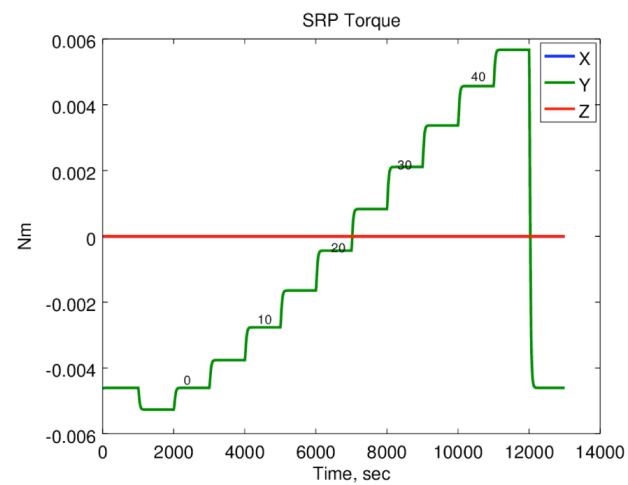

OST Optical Performance Budget

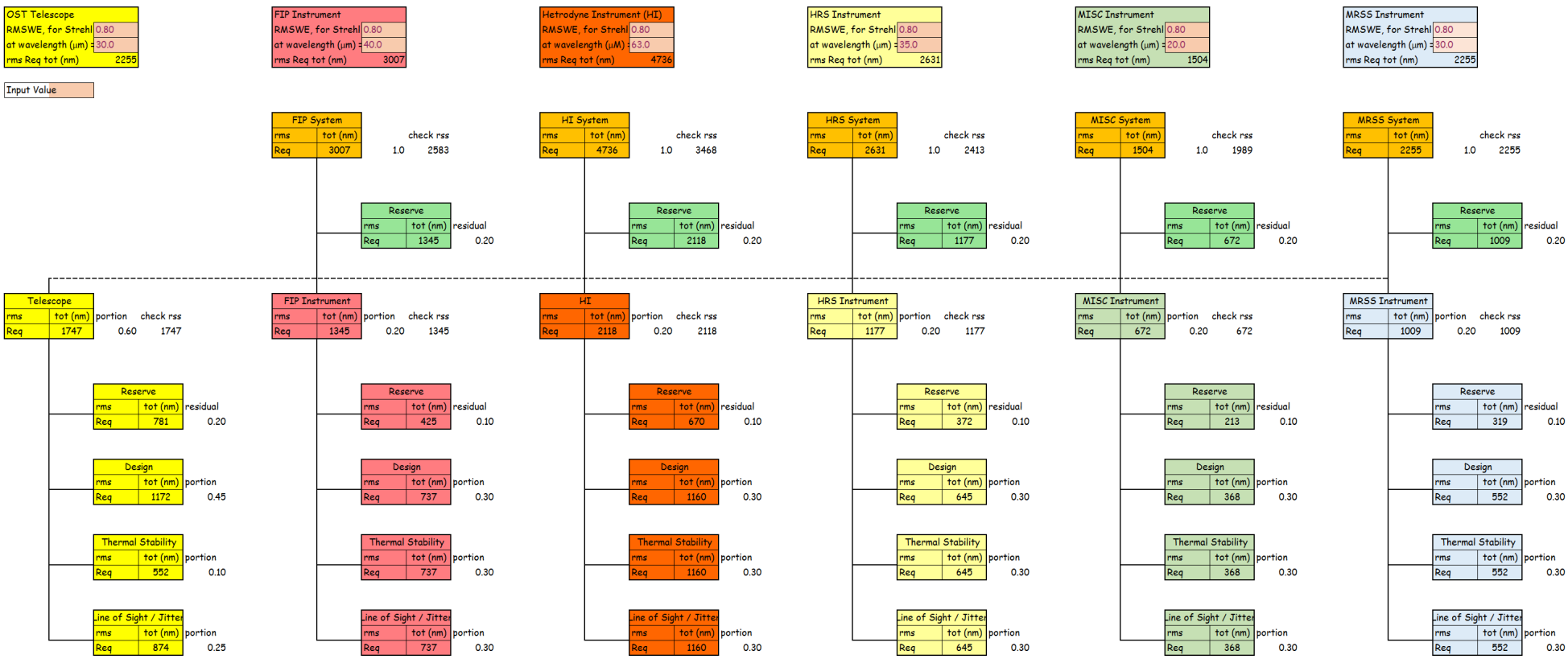

Future Work and Trades

- Complete initial OTE design inclusive of deployment, in particular. As its design progresses determine its structural frequency is adequate in the deployed configuration.
- Complete IAM and Spacecraft bus initial designs.
- Define concept packaging and deployment schemes for the Sunshield and Baffle Assembly
- Complete initial designs for the Deployable Tower Assembly (DTA) and the IAM's hinge mechanism. Resolve whether the DTA needs to be located or partially located inside of the spacecraft bus.
- Explore angular spacing between Sunshield layers.
- Commence a Structural, Thermal, Optics, and Pointing (STOP) analysis.
- Determine observatory Center of Pressure and Center of Gravity for stability.
- Single or dual axis solar array gimbal trade.

Issues and Concerns

- Packing of the telescope assembly remains a challenge in order to get everything to fit within the 5-m fairing. Total observatory volume, mass and power remain concerns.
- The OTE areal mass is very preliminary and is assumed to be ~40 kg/m^2. JWST's OTE areal density is ~68 kg/m^2.

Acronyms

Con Ops – Concept of Operations

DTA – Deployable Tower Assembly

FIP – Far Infrared Imager/ Polarimeter

FOV – Field of View

HGA – High Gain Antenna

HI - Heterodyne Instrument

HRS - High Resolution (Far-IR) Spectrometer

IAM - Instrument Accommodation Module

ISE – Instrument Systems Engineer

JWST – James Webb Space Telescope

LOS – Line of Sight or Loss of Signal

MISC - MID-IR Imager Spectrometer/ Coronagraph

MCWG – Mission Concept Working Group

MOC – Mission Operations Center

MRSS - Medium Resolution Survey Spectrometer

MSE – Mission Systems Engineer

OST – Origins Space Telescope

OTE – Optical Telescope Element

PM – Primary Mirror

SOC – Science Operations Center

STDT – Science and Technology Definition Team

STOP - Structural, Thermal, Optics, and Pointing analysis

WFIRST – Wide Filed Infrared Survey Telescope

Back-up Slides

Unobstructed Observatory Side Views Showing the Spacecraft Bus
Areal Density for JWST
Aft View of the Instrument Accommodation Module (IAM)
MRSS and HI Instrument Volumes

Unobstructed Observatory Side Views Showing the Spacecraft Bus

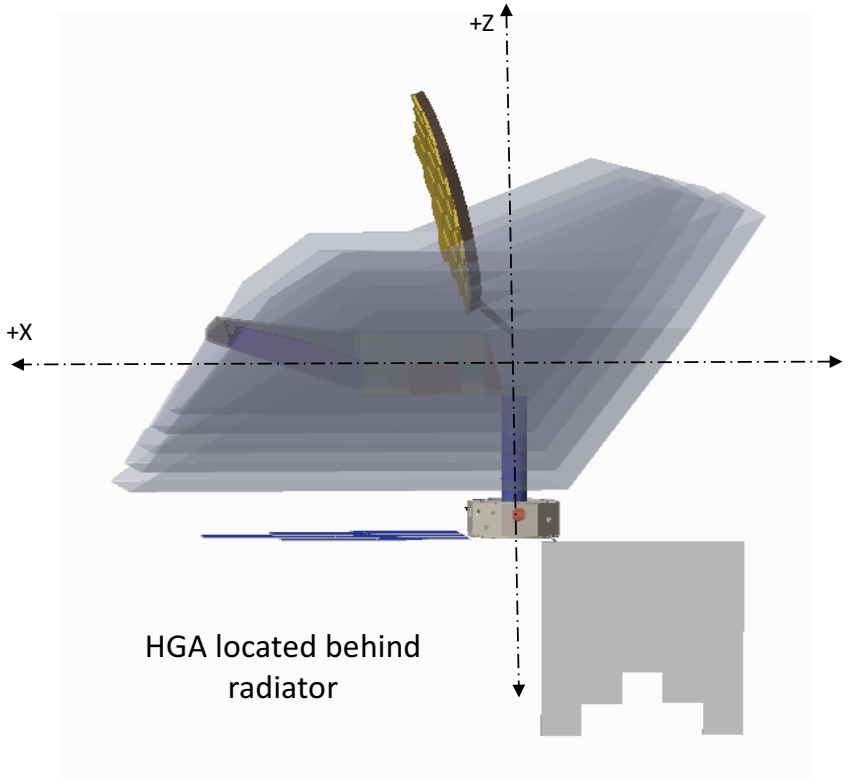

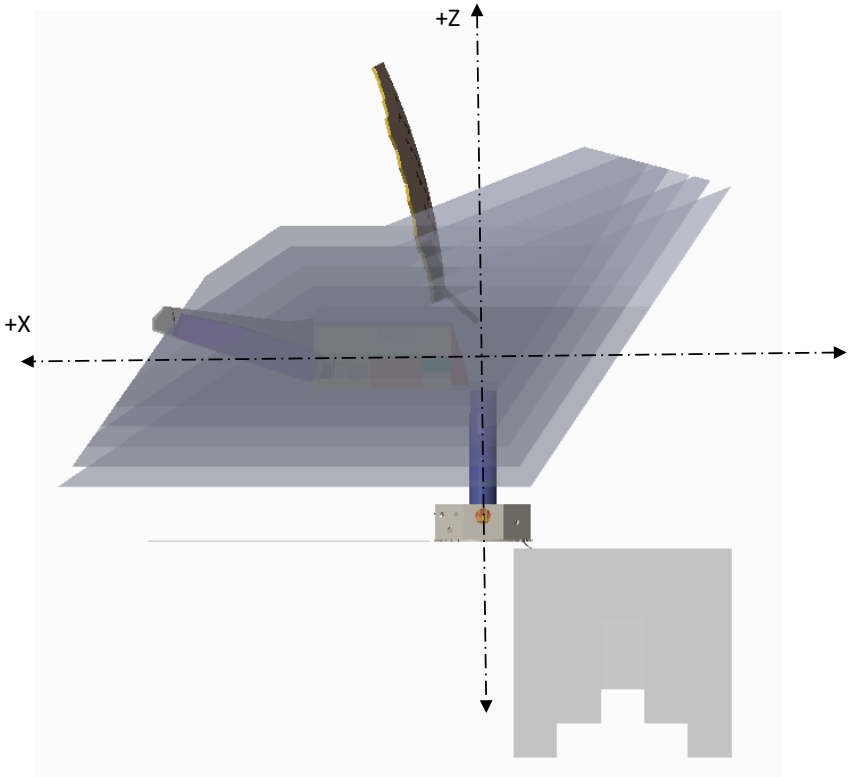

Areal Density for JWST

Item Description	Quanity	Estimated Unit Mass (kg)	Esitamted Mass (kg)
Optical Telescope Element (OTE)	1	2320.8	2320.8
Primary Mirror Segment Assembly (PMSA)	1	680.4	680.4
Secondary Mirror Assembly (SMA)	1	22.4	22.4
Aft Optics Subsystem (AOS)	1	101.4	101.4
Primary Mirror Backplane Support Structure (PMBSS)	1	946.0	946.0
PMBA Hinges, Latches, and Mechanisms	1	43.9	43.9
Secondary Mirror Support Structure (SMSS)	1	80.3	80.3
Thermal Management Subsystem (TMS)	1	285.6	285.6
Deployable Tower Assembly (DTA)	1	58.6	58.6
OTE Electronics	1	79.1	79.1
Launch Restraint Mechanisms (LRM) & Other	1	5.7	5.7
Mechanical Installation Hardware (MIH) - OTE	1	17.3	17.3
JWST Aperture Diameter (m)	6.5		
JWST Telescope Area (m^2)	33.2		
JWST OTE Areal Density (kg/m^2)	68.2		
OST Aperture Diameter (m)	9.1		
OST Telescope Area	64.9		

IAM Top-View Without Aft IAM Hosuing

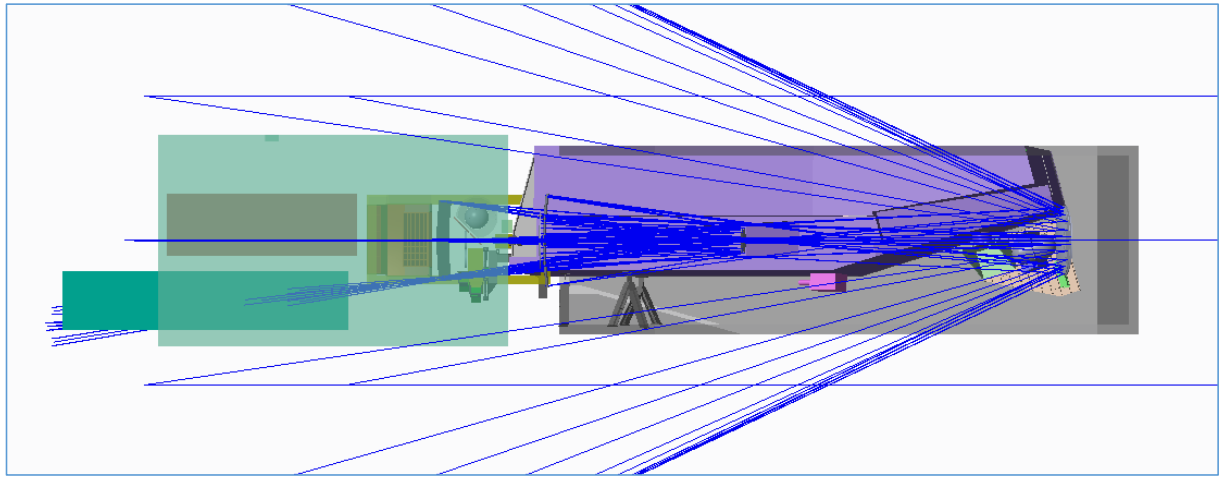
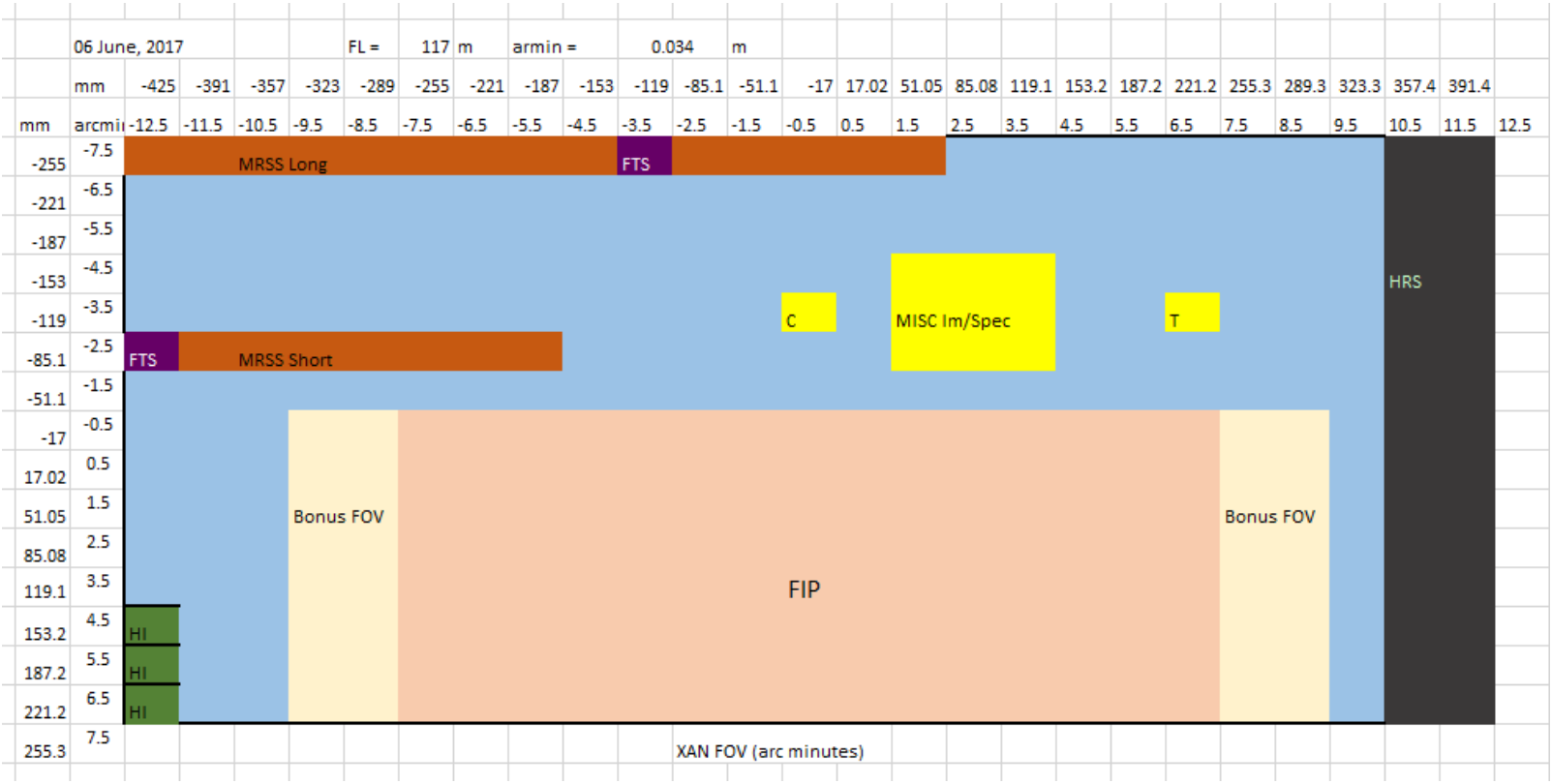
Telescope Field of View (FOV) Layout